BR-30
PV DC Fuse Holder

1 Brand
2 Type
3 Rated Current
4 Rated Voltage
5 Fuse Size
6 Electrical Diagram
7 Status Indicator

- Photovoltaic Applications
- Max Breaking Capacity up to 20KA,Effective Protection
- The Innovation Replacing Fuse Link Touch-safe
- Led Indicator, Reminding Fuse Link Replacement
- Be Suit for 10x38mm Fuse Size
- Comply with :IEC6094-3

Application

ZBENY PV DC BR-30 Fuse Holder was designed and manufactured , complying with the standard IEC60947-3. The Rated Current up to 30A,rated voltage up to 1000V DC. It applied for PV DC combiner box, inverter etc, with the main function of over-current protection and effective disconnection.

Appearance Introduction

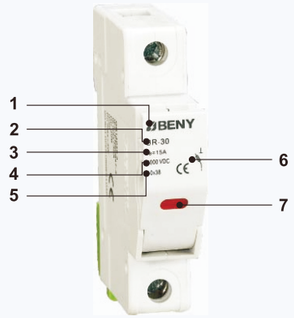

Type Instruction

BR	-	30	1000V
↓		↓	↓
Product Code		Max Rated Current	Rated Voltage
PV DC Fuse Holder		30A	1000V

Parameter

PV DC BR-30 Fuse Holder		
Pole		1P
According to		IEC 60947-3
Electrical Characteristics		
Rated Working Voltage	Ue	1000V DC
Rated Current	In	1A,2A,3A,4A,5A,6A,8A,10A,12A,15A,20A,25A,30A
Breaking Capacity		20kA
Max Power Dissipation		3W
Contol and Indication		
Operating State/Fault Indication		Indicator Light OFF/Indicator Light ON
Connection and Installation		
Wire		$2.5mm^2$~$25mm^2$
Terminal Screws		M5
Torque	Nm	2.5
Degree of Protection		IP20
Installation Environment		
Fuse Size		10x38 mm
Operating Temperature Range	TU	-40°C ~ +85°C
For Mounting On		TH35-7.5/DIN35
Pollution Degree		3
Relative Humidity		+20°C≤95%,+40°C≤50%
Weight		0.07kg Per pole
Installation Class		Ⅲ

Installation

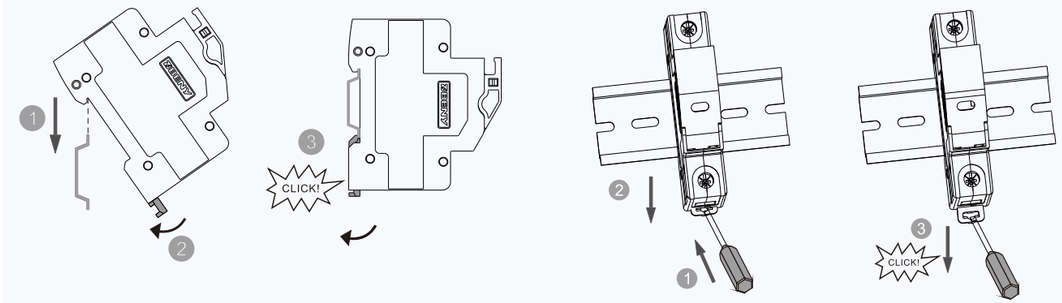

Replacement Fuse

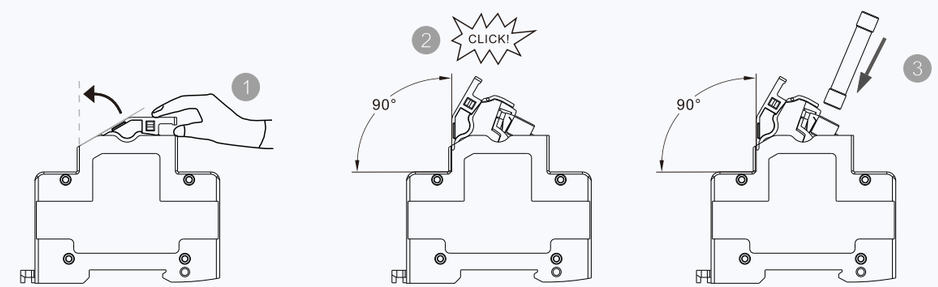

Dimensions(mm)

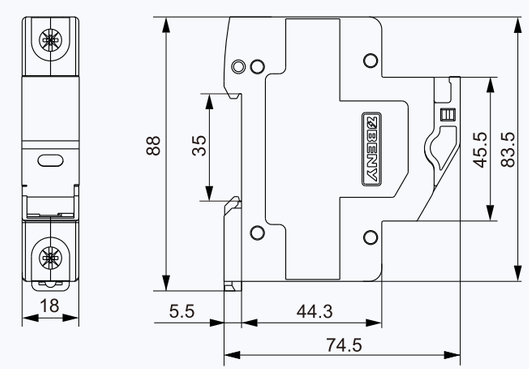

DC Fuse Holder